BRIMAR®

How-To: Splice a Double Rod System.

MANHATTAN
Haute Drapery Hardware

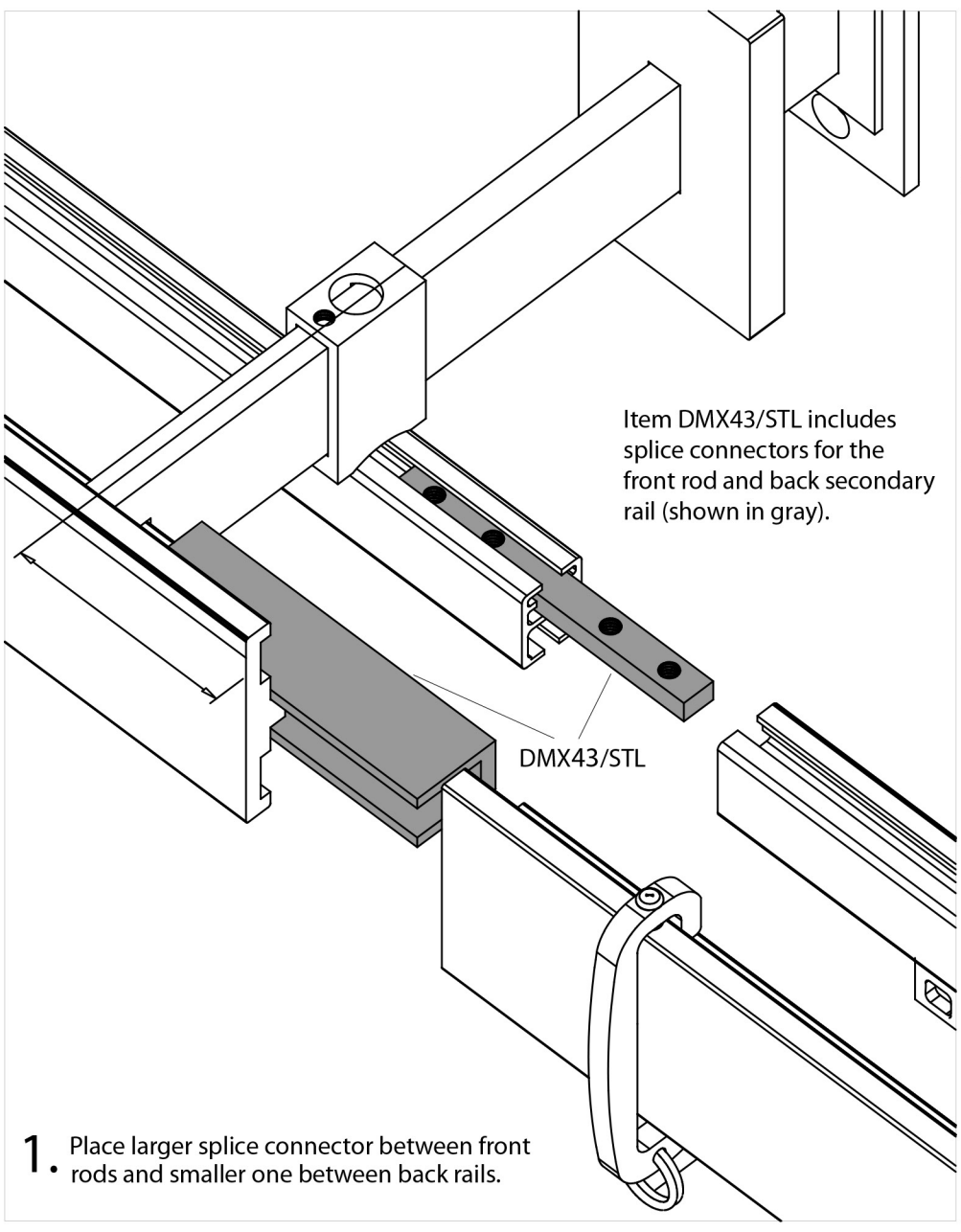

1. Place larger splice connector between front rods and smaller one between back rails.

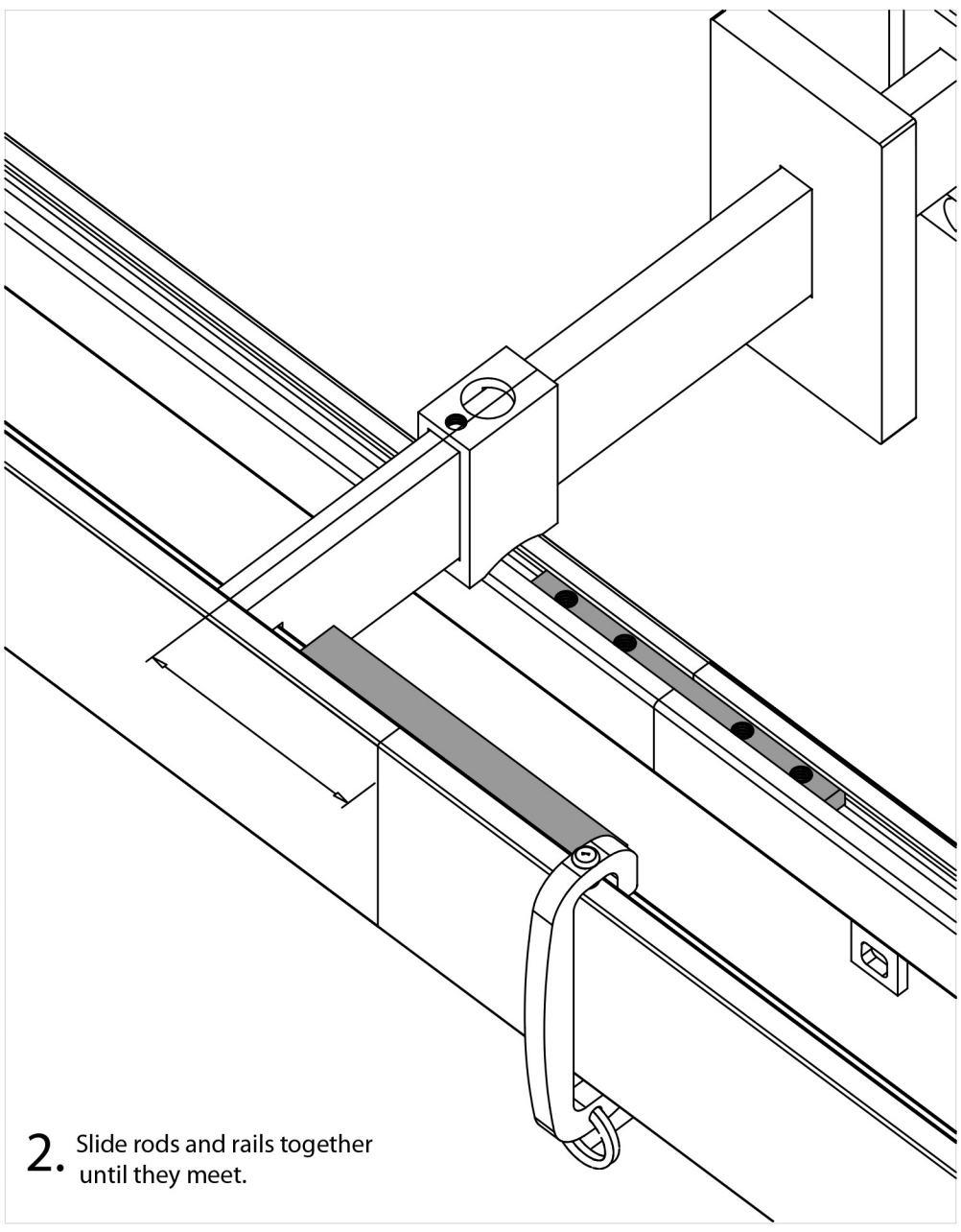

2. Slide rods and rails together until they meet.

BRIMAR®

MANHATTAN
Haute Drapery Hardware

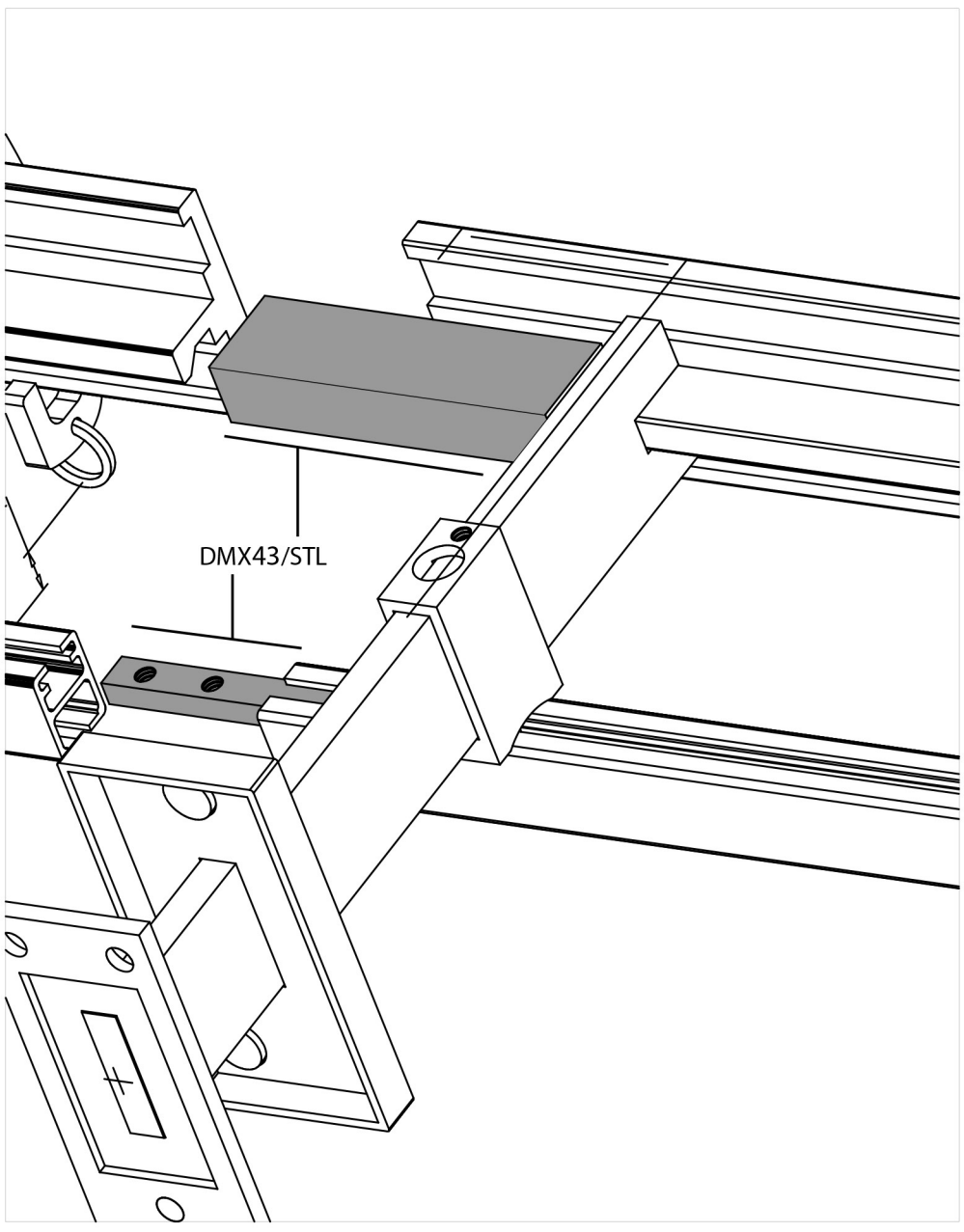

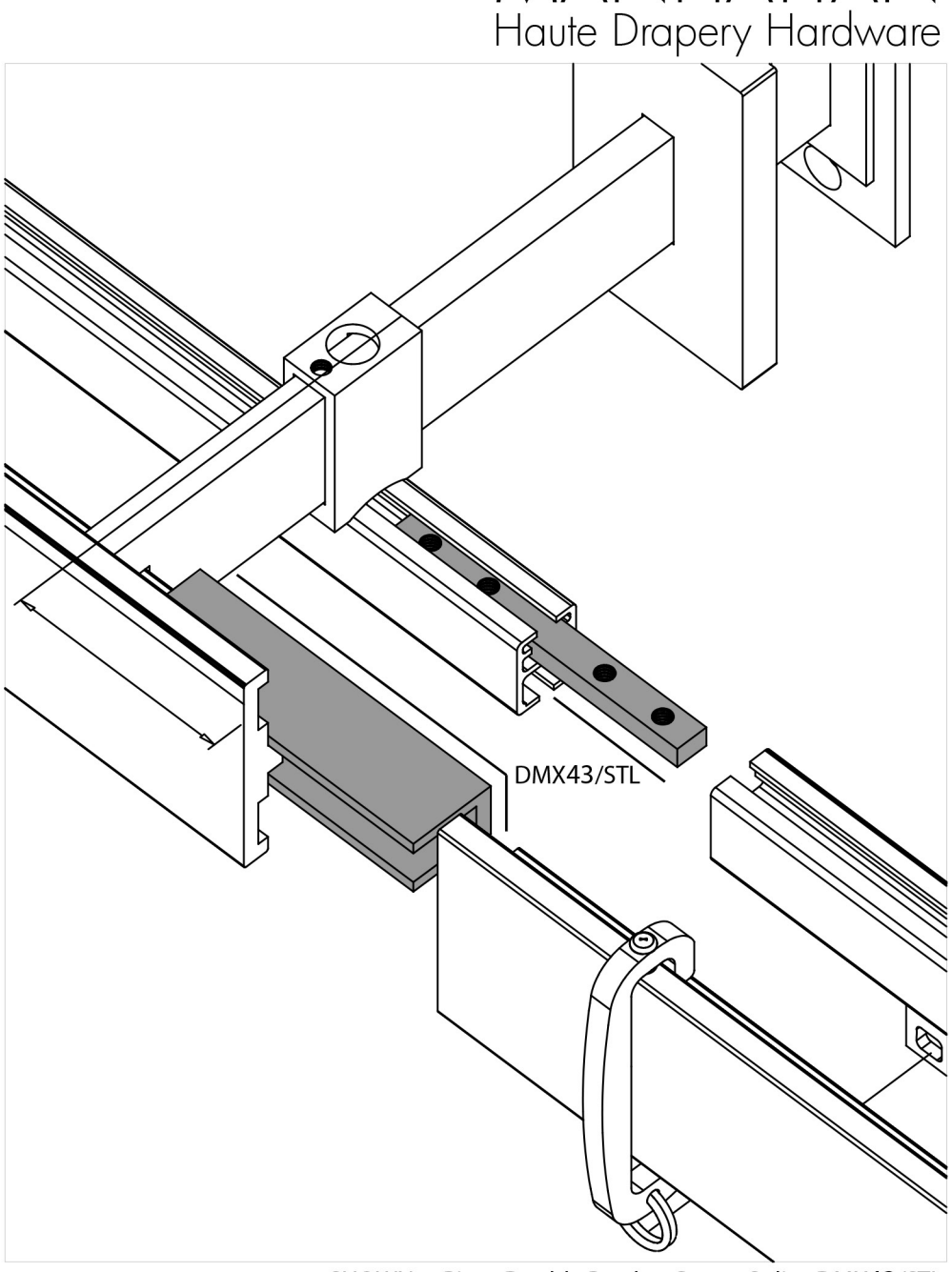

SHOWN: 2 Piece Double Bracket Center Splice DMX43/STL.

BRIMAR®

MANHATTAN
Haute Drapery Hardware

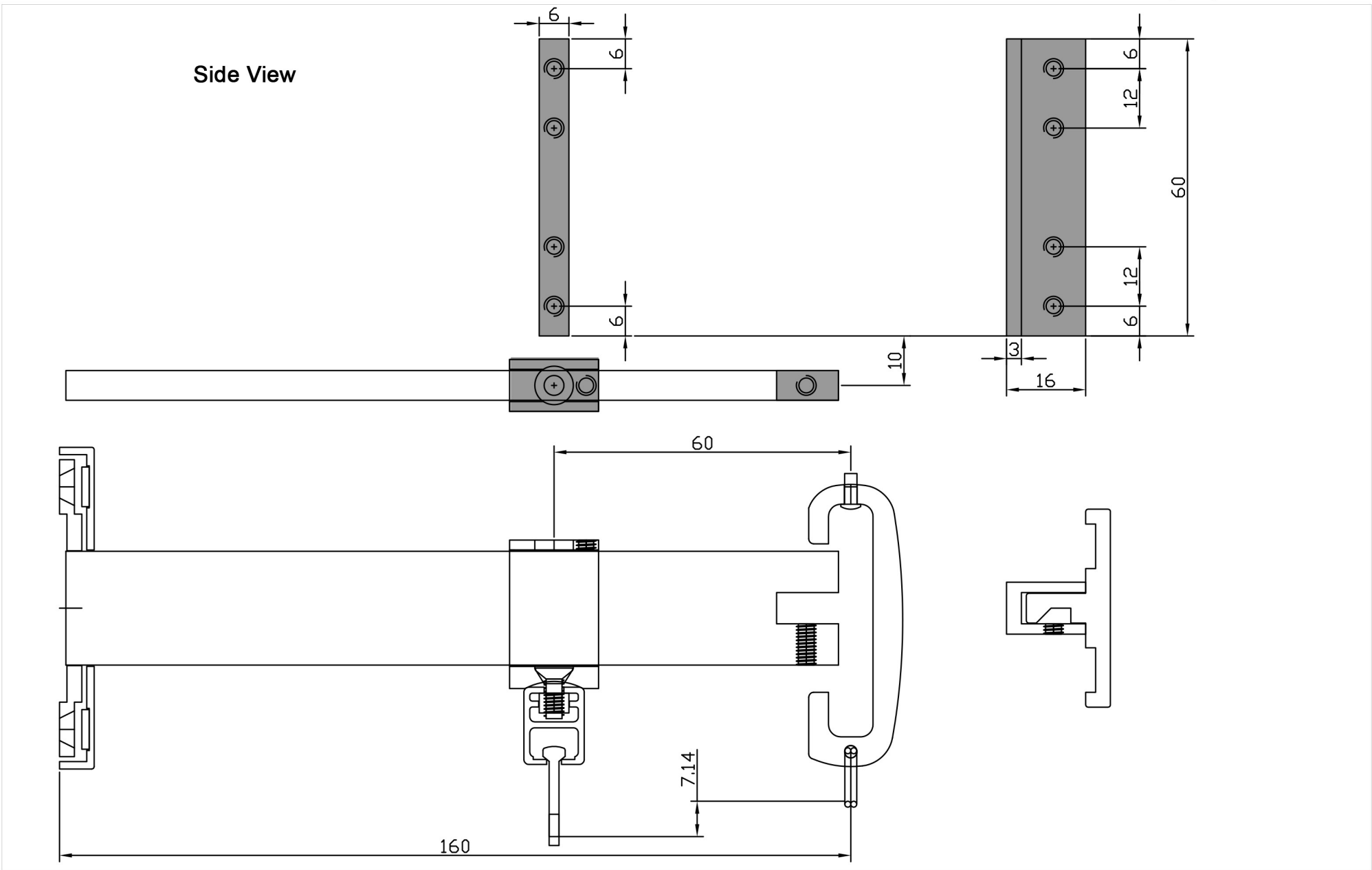

SHOWN: 2 Piece Double Bracket Center Splice DMX43/STL.

t 847.247.0100 f 847.247.9270 brimar@brimarinc.com brimarinc.com